THE OVERLY-HAUTZ MOTOR BASE COMPANY
215 SOUTH WEST STREET
LEBANON, OHIO 45036
TELEPHONE: (513) 932-0025

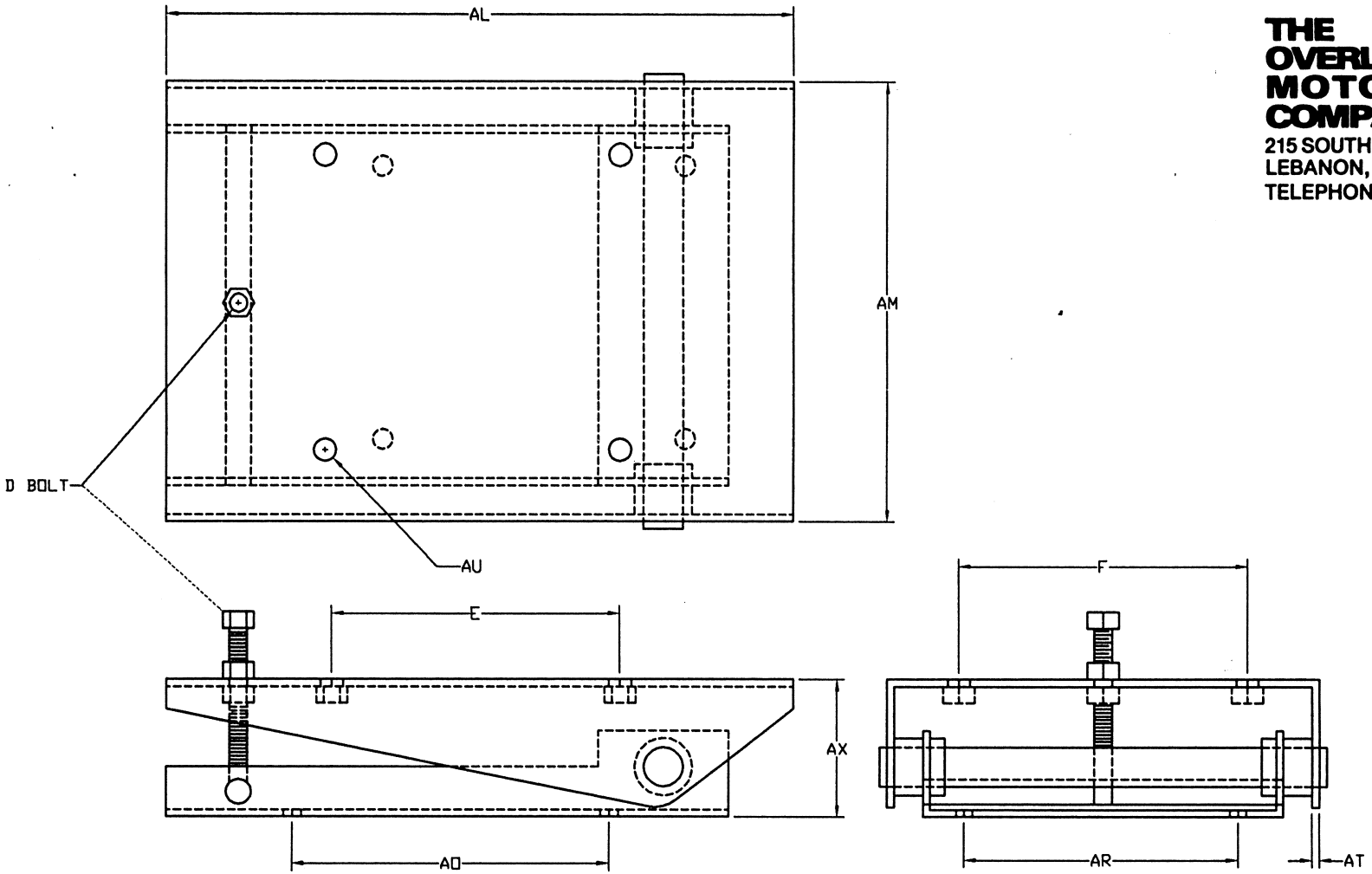

NEMA FRAME	OVERLY HAUTZ PART NUMBER	AL	AM	AX	E	F	AO	AR	AU	AT	D BOLT
56	A101725	12.50	7.50	4.75	4.875	3.00	6.00	2.50	.375	.25	1/2-13
182T	A101614	17.50	8.50	4.75	7.50	4.50	9.50	3.50	.50	.25	1/2-13
184T	A101722	17.50	9.50	4.75	7.50	5.50	9.50	4.50	.50	.25	1/2-13
213T	A101544	18.50	11.00	4.75	8.50	5.50	10.50	4.50	.50	.25	1/2-13
215T	A101927	18.50	11.00	4.75	8.50	7.00	10.50	5.50	.50	.25	1/2-13